CAT-W 0051-02

IWAKI

Pneumatic drive bellows pumps

F series

Patent
JAPAN

⚠ Caution for safety use: Before use of pump, read instruction manual carefully to use the product correctly.
Actual pumps may differ from the photos. Specifications and dimensions are subject to change without prior notice. For futher details please contact us.

For ultrapure chemical delivery in semiconductor processing

The F series comprises pneumatic drive bellows pumps designed for use in semiconductor manufacturing processes.
Iwaki pneumatic drive bellows pumps were introduced to the market over 20 years ago;
since then we have actively developed and improved products in step with rapidly changing market needs.
Over 20 models of pumps are available.
Their quality and performance are recognized and highly rated by device manufacturers all over the world.

Not only pumps, but peripheral devices such as controllers,
dampeners and liquid chemical supply systems have been developed
to augment a well rounded portfolio of quality equipment for wet process and surface preparation.

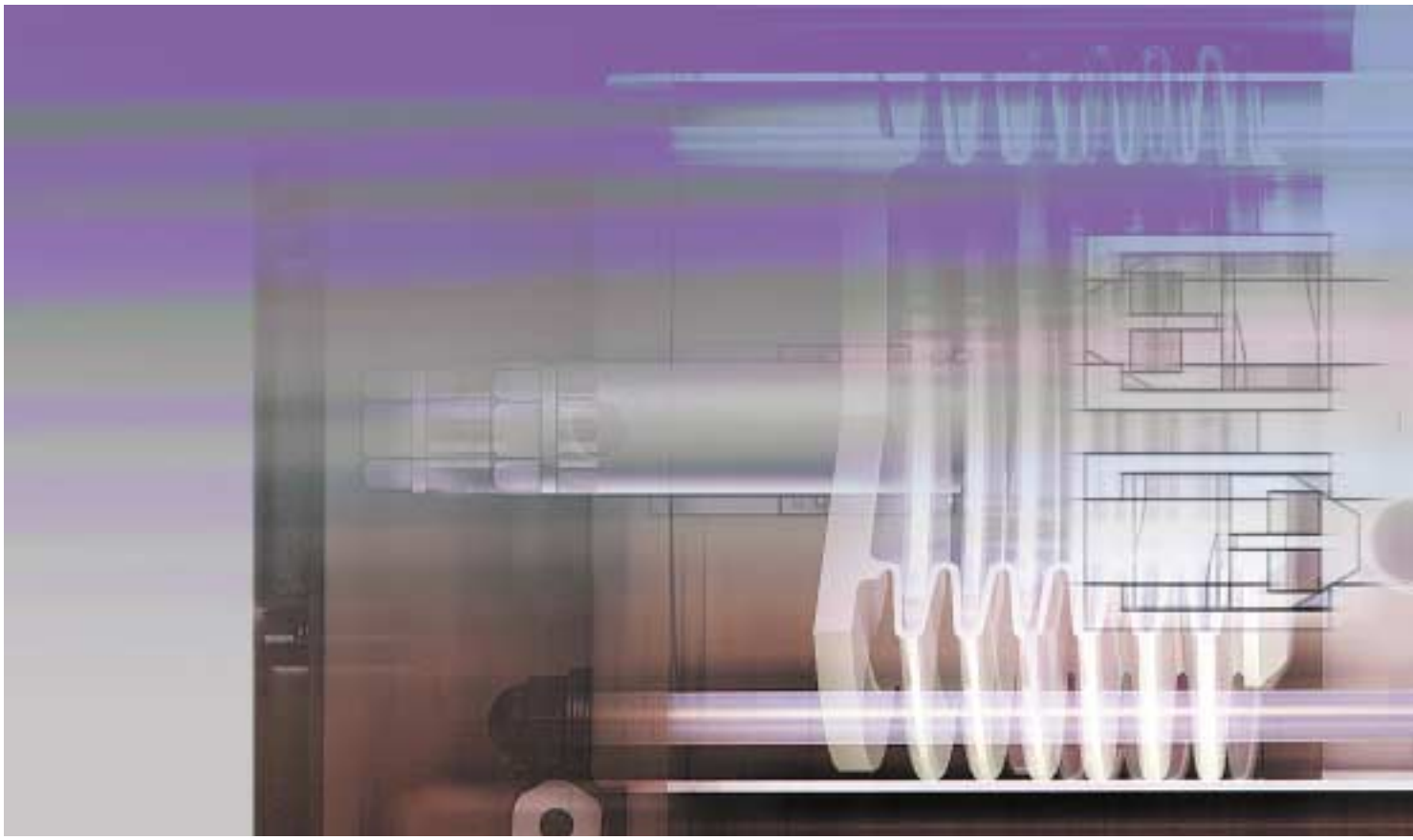

Guideline for pump selection

Max. discharge capacity (L/min) / Max. supplied air pressure (MPa)	Model	Max. air consumption (NL/min)	Temperature range (˚C)	Main materials	
				PTFE	PFA
80 / 0.5	FW	820	10 - 100	○	○
40 / 0.5	FW-H	480	10 - 180	○	○
22 / 0.3	FF	180	5 - 100	○	○
40 / 0.2	FF-H	200	20 - 180	○	○
40 / 0.4	FA	200	5 - 100	○	○

Contamination-free Design
All the wetted parts are made of fluororesin which is highly resistant to chemical attack and heat. Fiercely corrosive liquids are safety transfer with less particle matter being produced.

Sensor-drive System
The pump is driven by a built in stroke sensor located away from the liquid path. The operation is reliable and the pumps function with stability even at low stroke rates.

Built-in Leak Sensor
As standard equipment, all the models have leak sensors which are ensured to react promptly if the bellows are damaged.

Enhanced Accessories
Dampeners, controllers and other accessories have been improved and refined. Their use minimizes particle production and extends the life of the bellows.

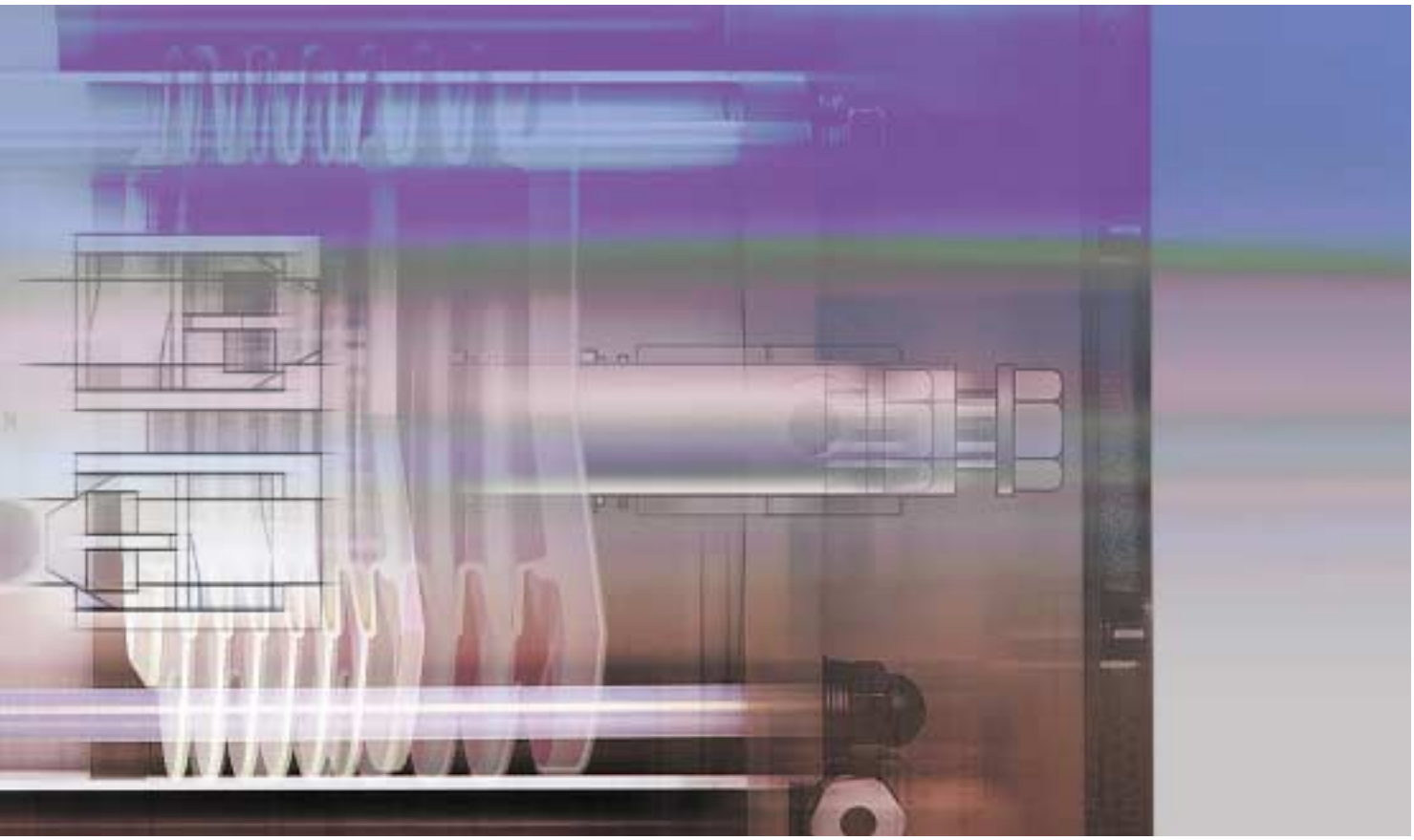

Application

○ Usable △ Usable depend on condition

		FW	FW-H	FF	FF-H	FA	CFD
Wafer wet-bench	Cleaning (Batch process)	○	○	○	○	○	
	Cleaning (Single wafer)	○	○	○	○	○	
Chemical supply equipment		○		△		△	
CMP process	Mixed-liquid circulation /Transfer	○		△		△	
	Cleaning	○		○		○	
Chemical repleshing equipment							○

Example of Installation

Cleaning / circulation / replenishing / processes

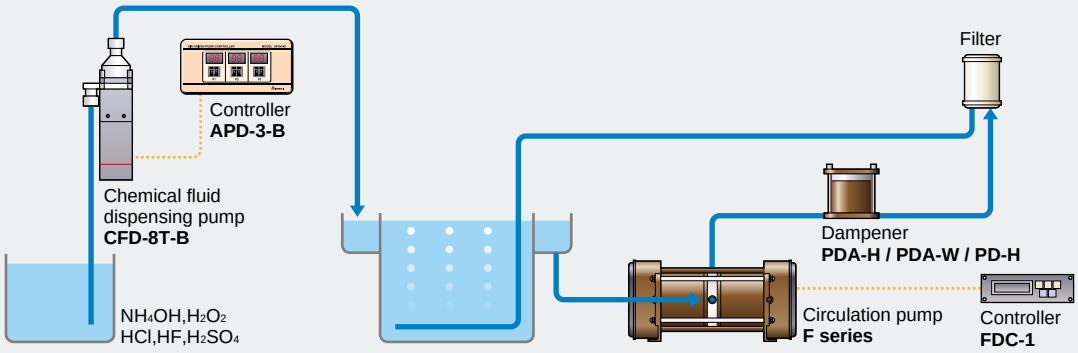

Chemical feeding equipment

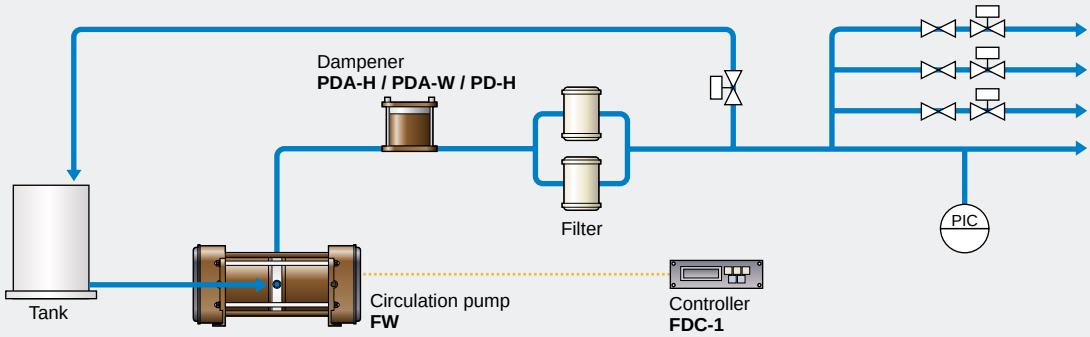

CMP process

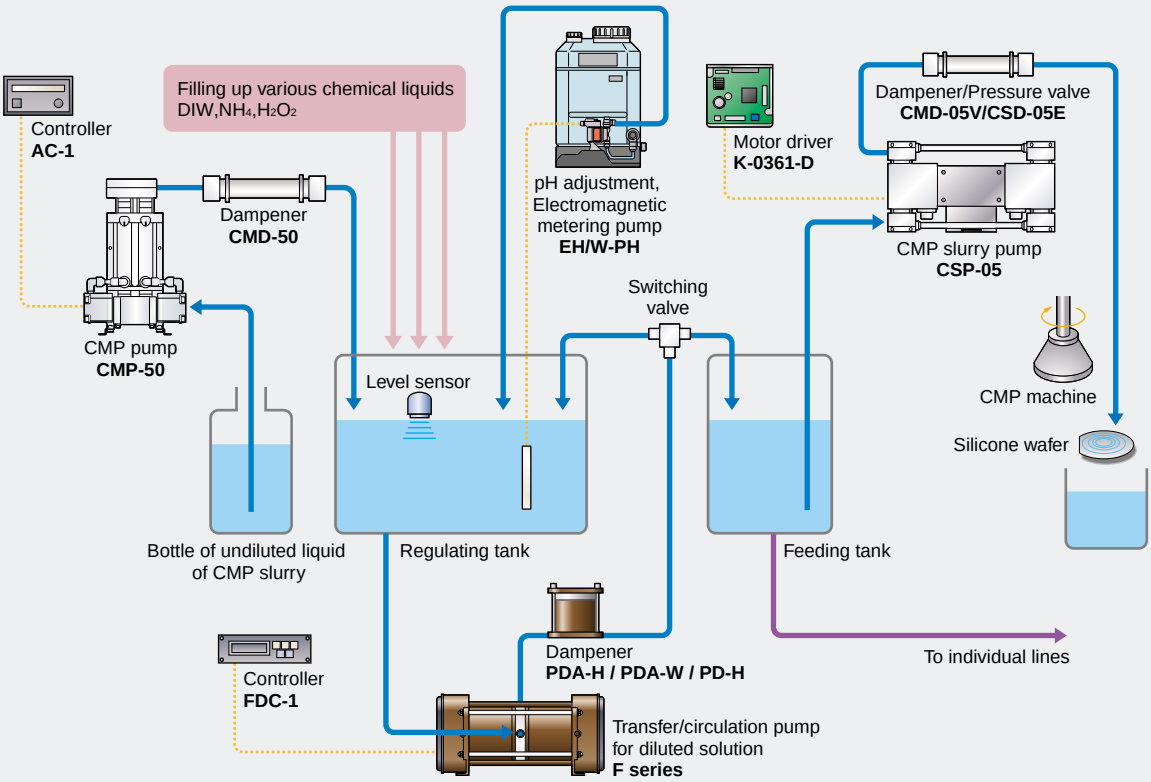

Robust bellows design advances high pressure performance and service life

Pneumatic drive bellows pumps

FW
FW-H

The adoption of thick bellows enables the pump to discharge liquid under pressure as high as 0.45 MPa maximum. Moreover, the bellows have three or four times as long a life as a diaphragm. Thus, the downtime can be substantially reduced.

In addition to its use in feeding chemical liquid, the FW series specified for high pressure and medium temperature (10 to 100˚C) is usable in a cleaning system and for the circulation of CMP slurry liquid and the FW-H series for high pressure and high temperature (10 to 180˚C) is usable as a circulation pump in a cleaning system.

The fitting portions for suction and discharge are of PFA tubular structure formed integrally. This prevents particles from accumulating and allows joints available on the market to be used.

When connected to a special controller, the discharge can be controlled and monitored easily.

Construction and materials

1 Pump head PTFE(Tube : PFA)
2 Valve PTFE
3 Valve case PTFE
4 Bellows PTFE

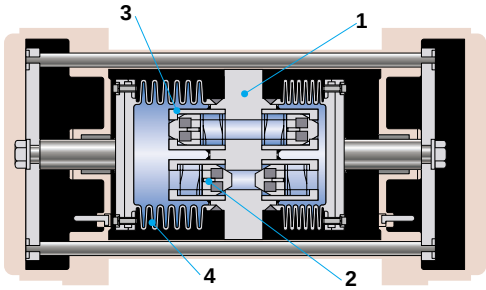

Specifications

Model		FW-20	FW-40	FW-80	FW-20H			FW-40H		
Max. discharge capacity	L/min	20	40	80	20			40		
Liquid temperature range	˚C	10 to 100	10 to 100	10 to 80	10 to 100	101 to 150	151 to 180	10 to 100	101 to 150	151 to 180
Max. supplied air pressure	MPa	0.2 to 0.5	0.2 to 0.5	0.2 to 0.5	0.2 to 0.5	0.15 to 0.3	0.15 to 0.2	0.2 to 0.5	0.15 to 0.3	0.15 to 0.2
Max. stroke speed	spm	120	80	80	120			80		
Max. air consumption	NL/min	330	480	820	330	200	140	480	300	220
Pump connection size		ø19 X ø16 PFA tube	ø25 X ø22 PFA tube		ø19 X ø16 PFA tube			ø25 X ø22 PFA tube		
Supplied air connection size		Rc1/4	Rc3/8	Rc1/2	Rc1/4			Rc3/8		

Note: Max. discharge capacity shows when pumping clear water at 20˚C.

Energy saving design to consume less air

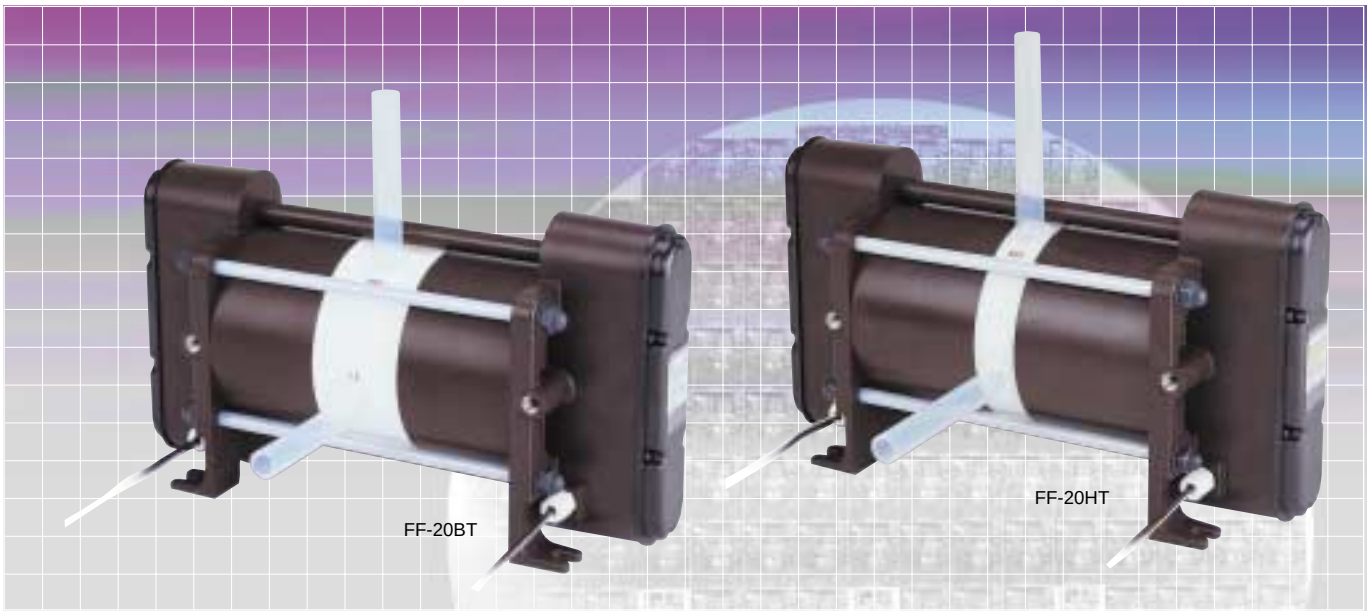

Pneumatic drive bellows pumps

FF
FF-H

The FF series are specified for use with medium temperature liquids (The PVC cylinder type: 5 to 50˚C; Al cylinder type: 5 to 100˚C) and the FF-H series are designed to handle a wide range of chemical liquids ranging from ordinary temperatures to high temperatures (20 to 180˚C).

The liquid end parts are made entirely from fluororesin and free from contamination as they are designed so as to use neither rubber nor metal. As the bellows are completely welded with the body of the FF-H series, there is no leakage due to heat cycles. The dead volume of air is minimized for saving the consumption of air.

The packing of the pump shaft can be replaced with a new one easily, without disassembling the pump.

The suction port and discharge port are of PFA tubular structure in the FF-H series. For the FF series, a tubular structure type and pump attached with special fitting are available.

When connected to a special controller, the discharge can be controlled and monitored easily.

Construction and materials

1	Pump head	PTFE(Tube : PFA)
2	Valve	PFA
3	Valve case	FF:PTFE FF-H:PFA
4	Bellows	PTFE

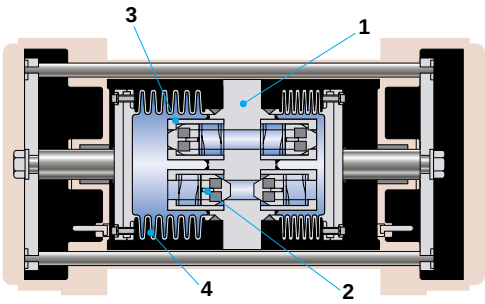

Specifications

Model		FF-10BT/CT	FF-20BT/CT	FF-10HT	FF-20HT	FF-40HT
Max. discharge capacity	L/min	10	22	10	20	40
Liquid temperature range	˚C	B type : 5 to 100 C type : 5 to 50*		20 to 180		
Max. supplied air pressure	MPa	0.3		0.2		
Max. stroke speed.	spm	120		120		80
Max. air consumption	NL/min	90	180	80	150	200
Pump connection size		1/2" PFA tube	3/4" PFA tube	1/2" PFA tube	3/4" PFA tube	ø25 X ø22PFA tube
Supplied air connection size		Rc1/4		Rc1/4		Rc3/8

* The cylinder of the "B" type is made of aluminum and tetrafluororesin and that of the "C" type is of PVC.
Note: Max. discharge capacity shows when pumping clear water at 20˚C.

Two models for circulating medium temperature liquid

Pneumatic drive bellows pumps

FA

There are two standardized models; the FA-2E, a lateral type for a low flow rate, and the FA-40VEW, a vertical type for a high flow rate. The FA-2E employs a spray system for single wafer processing while the FA-40VEW is suitable for cleaning 200/300 mm wafers.

H-shaped thick bellows are used(Only FA-40VEW). They have excellent resistance to high pressure and a long life to withstand continuous long-time operation. When connected to a special controller, the discharge can be controlled and monitored easily.

Construction and materials

1	Pump head	PTFE
2	Valve	PFA
3	Valve case	FA-2E : PFA FA-40VEW : PTFE
4	Bellows	PTFE

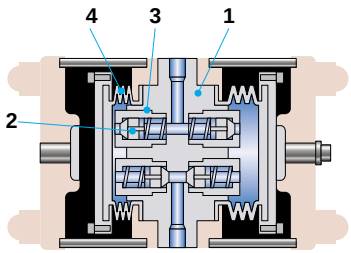

FA-2E

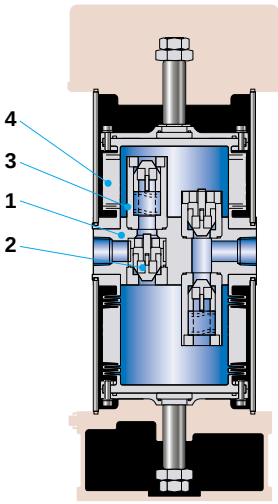

FA-40VEW

Specifications

Model		FA-2E	FA-40VEW
Max. discharge capacity	L/min	2	40
Liquid temperature range	˚C	5 to 100	
Max. supplied air pressure	MPa	0.4	
Max. stroke speed	spm	150	80
Max. air consumption	NL/min	50	200
Pump connection size		Rc1/8	Rc1
Supplied air connection size		Rc1/4	Rc3/8

Note: Max. discharge capacity shows when pumping clear water at 20˚C.

Optional accessories

Automatic dampeners
PDA-H/PDA-W

PDA-20W

Pump pressure can be automatically adjusted to minimum pulse pressure regardless of a change in the discharge of the pump likely to be caused by the clogging of a filter. Particles are hindered from passing through filters and pipes are protected from vibrations.

Downtime can be reduced because there is no need of on-the-spot adjustment of pressure.

Installation in existing facilities or equipment is possible.

Construction

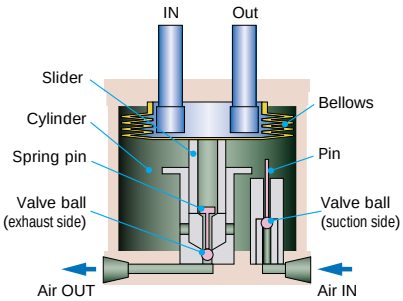

Note : Above illustration shows PDA-H

Specifications

Model	PDA-10H PD-10H	PDA-20H PD-20H	PDA-40H PD-40H	PDA-20W	PDA-40W	PDA-80W	PD-20W	PD-40W	PD-80W
Applicable pumps	FF-10 FF-10H	FF-20 FF-20H	FA-40VEW FF-40H	FW-20 FW-20H	FW-40 FW-40H	FW-80	FW-20	FW-40	FW-80
Liquid temperature range ˚C	20 to 180			10 to 180			10 to 100		10 to 80
Max.enclosed air pressure MPa	0.3		0.4	0.5			0.5		
Pulsation pressure range MPa	0.04 or less			0.06 or less			0.06 or less		
Connection size	1/2" PFA Tube	3/4" PFA Tube	1" PFA Tube	ø19X ø16 PFA Tube	ø25X ø22 PFA Tube		ø19X ø16 PFA Tube	ø25X ø22 PFA Tube	
Supplied air connection size	Rc1/4			Rc1/4			Rc1/4		
Wet end material	PTFE/PFA			PTFE/PFA			PTFE/PFA		

Note 1: The damper cannot be used at a pressure above the level specified for the pump.
Note 2: The range of pulse pressures depends on conditions of usage. For further information, please call us.

Dampeners
PD-H

PD-10H

Having no automatic pressure adjustment mechanism.

Pump driver
FD-1/FD-2

FD-2

Pump drivers FD-1/2 are low-cost drivers. The FD-1 is for the FF, FF-H, and FA pumps and the FD-2 for the FW and FW-H pumps.

As its fixed stroke rate control function enables the pump to operate with a fixed number of strokes regardless of a change in the pump load on the discharge side, a stable discharge is maintained. Since it is also possible to keep the differential pressure always at a minimum value, the life of the bellows is extended.

The length of time (reference time) required for one shot of the pump can be set. A time-up alarm is output when the pump operates more quickly than the reference time so as to make one aware of the defective operation of the pump.

In the event damage is caused to the bellows, a leak alarm is output to bring the pump to an emergency stop.

Specifications

Power voltage		DC24V ±10%
Power consumption		24VA or less
Ambient temperature for operation		0 to 55˚C
Ambient humidity for operation		Corrosive gas is not permited
External input	External starting signal	AUTO: Relay contact
External input	External stroke rate variable/ switching signal	Input resistance: Variable 0 to 100% at 0 to 5 kΩ
External input	External stroke rate variable/ switching signal	AUTO: Relay contact, Contact ON/Variable by external signal, Contact OFF/ Variable by volume
External input	Maximum pump stroke rate setting/switching	4-stage changes by dip switch (80, 120, 150 and 200 spm)
External output	Leak alarm/ time-up alarm	Relay contact output
Dimensions in mm		W120 x D120 x H40

Note: DC24V type is also available on request.

Pump controller
SC-1/SC-2

SC-1

These are controllers specially made for the F series pumps. Each controller can control three pumps simultaneously. The Model SC-1 is for the FF, FF-H, and FA pumps and the SC-2 is for the FW and FW-H pumps.

Owing to their function of fixed flow rate control, the discharge of the pump is kept at a fixed level even when the discharge pressure of the pump changes due to filter clogging so as to maintain stable circulation/filtration.

The range of pump pulsation is held always to a minimum level by automatic control of the pressure of the air fed to the dampener. Thus, on-the-spot adjustment of pressure is no longer necessary.

Since the difference in pressures in and out of the bellows is kept to a minimum value despite a change in the pump load on the discharge side, the life of the bellows is extended.

Specifications

Power voltage		DC24V ±10%
Power consumption		24VA or less
Ambient temperature for operation		0 to 55˚C
Ambient humidity for operation		Corrosive gas is not permited
External input	Command for flow rate switching, start, alarm reset, output ignoring low pressure alarm	Input signal: Potential free or transistor open collector, ON voltage: 3 V or less, OFF voltage: 18 V or more
External output	Leak alarm/defective pump operation alarm, liquid pressure upper/middle/lower limit alarms, total account alarm, ready output	Output mode: NPN transistor open collector, Switching capacity: DC 24V 0.4A
Dimensions in mm		W210 x D180 x H110

Pump controller
FDC-1

As it controls the pump at a fixed level of discharge when it is connected to a vacuum regulator, stable circulation and filtration continue despite possible fluctuation of a discharge load due to clogging of the filter or some other reason. Since the difference between the inside pressure and the outside pressure of the bellows can be held at a minimum level, an increase in the life of the bellows is to be expected. Monitoring of the flow rate, the number of strokes and total count are possible. There are two operation modes; the AUTO mode by external signals and the MANU mode for manual operation. In addition to the sensor mode for operation by the proximity switch, the timer mode is provided as standard equipment. This means that if the proximity switch fails, the operation can be continued in the timer mode. Alarm displays such as leak alarm, pump malfunction alarm are available.

Specifications

Power voltage		DC24V±10%
Power consumption		24VA or less
Ambient temperature for operation		0 to 50˚C
Ambient humidity for operation		Corrosive gas is not permited
External input	Start, Alarm reset	No-voltage contact or open collector Voltage ON: 3V maximum Voltage OFF: 18V maximum
External output	Leak alarm Pump malfunction alarm Life alarm First alarm	Output form: NPN open collector Switching capacity: DC24V 0.4A
Dimensions in mm		W158 x D152 x H48

Pump controller
AC-1

This is an inexpensive type controller for the F series pumps.
Upon receiving a signal from the pump's built-in stroke sensor, the controller reliably activates the solenoid.
It functions to output an alarm in case the pump stops or the bellows are damaged.

Specifications

Power voltage	AC100V ±10% 50/60 Hz
Power consumption	24VA or less
Ambient temperature for operation	0 to 60˚C
Ambient humidity for operation	Corrosive gas is not permited
Dimensions in mm	W144 x D146 x H72

Quick exhaust valve
QEV

When the quick exhaust valve is mounted between a pump and a solenoid, the solenoid is protected from corrosion caused by returned air. In the event the bellows are damaged, the valve is useful to prevent chemical liquid from sprouting out of the tank into the air and from splashing onto the air side.

QEV-8V

Specifications

Model	Connection size	Applicable models
QEV-8V	Rc1/4	FW-20/20H, FF-10/10H FF-20/20H, FA-2
QEV-10V	Rc3/8	FW-40/40H, FF-40H, FA-40
QEV-15V	Rc1/2	FW-80

Performance curves

FW/FW-H

H-Q
Air consumption

FW-20/20H

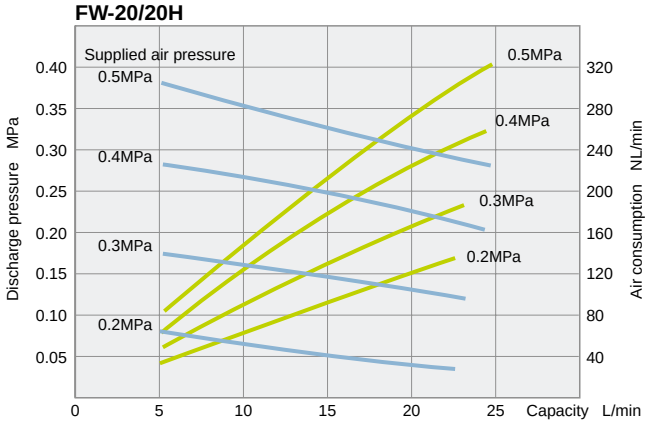

FW-40/40H

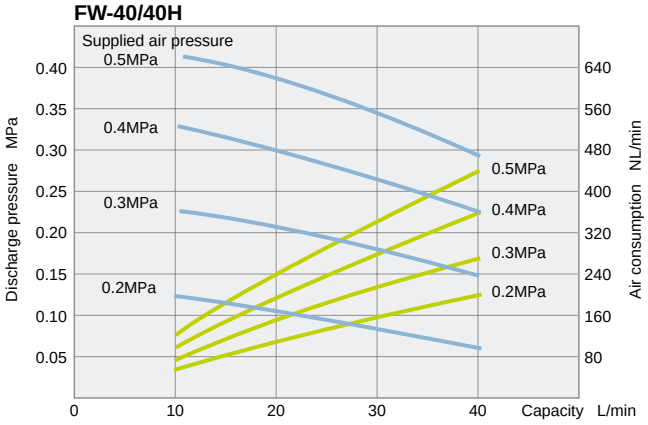

FW-80

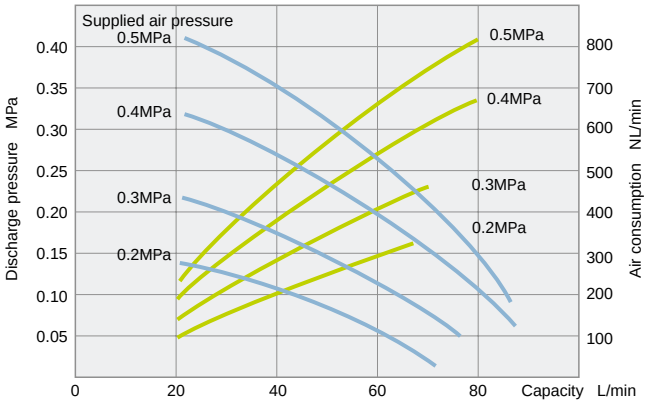

FF

FF-10

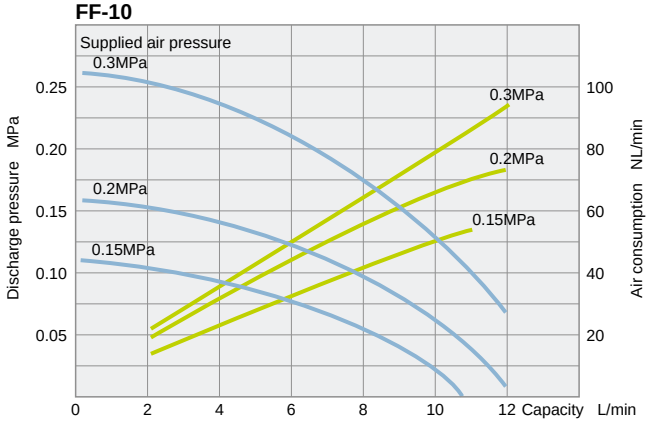

FF-20

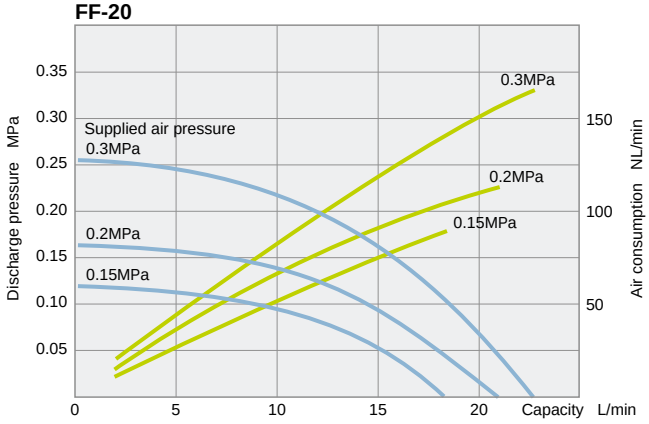

Dimensions in mm

FW, FF

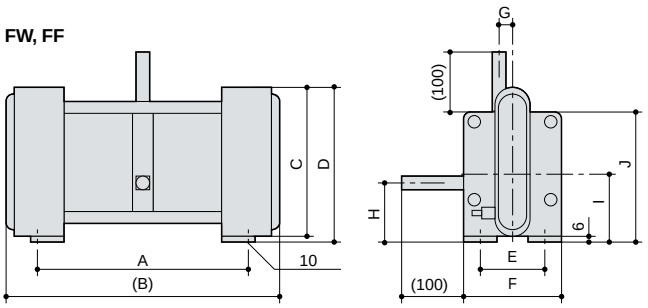

Model	A	B	C	D	E	F	G	H	I	J
FW-20/20H	346	458	218	221	105	140	22	90	112	182
FW-40/40H	434	542	240	250	140	180	25.5	102	130	220
FW-80	463	600	302	317	185	240	27	119.5	158.5	317
FF-10/10H	266	361	188	191	84	114	14.5	82	97	154
FF-20/20H	288	400	218	221	105	140	20	91	112	182
FF-40H	431	533	240	250	140	180	23.5	97	130	220

FF-H

FF-10H

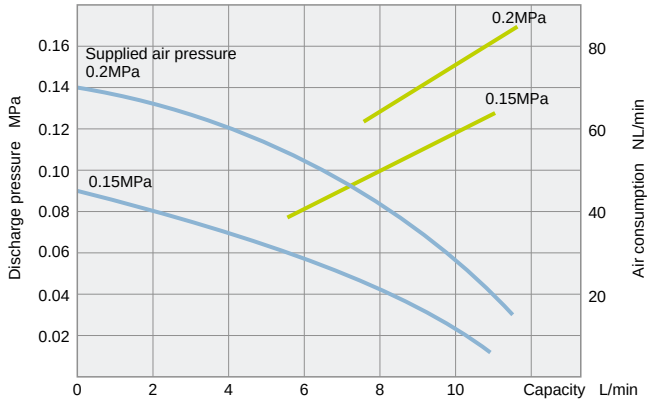

FF-20H

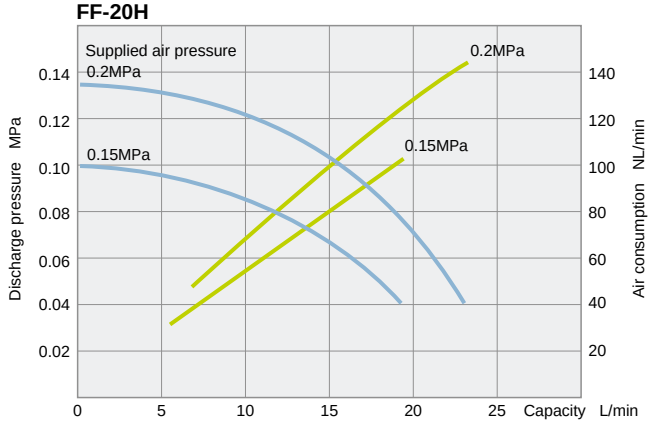

FF-40H

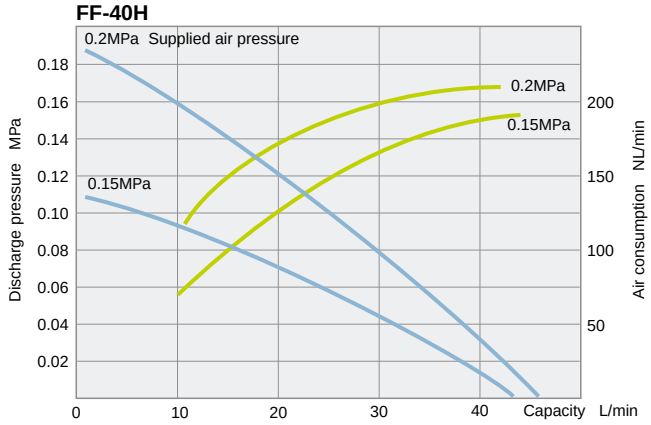

FA

FA-2E

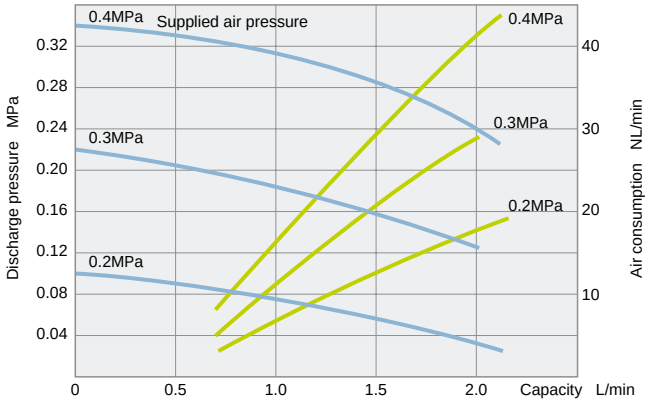

FA-40VEW

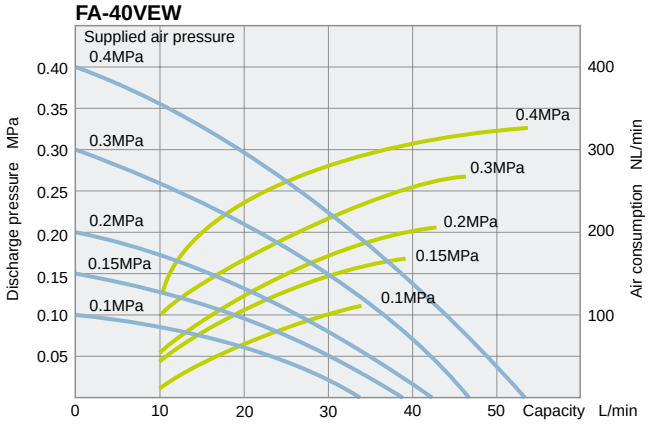

FA-2E

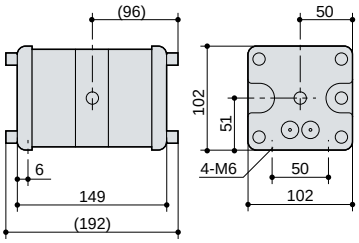

FA-40VEW

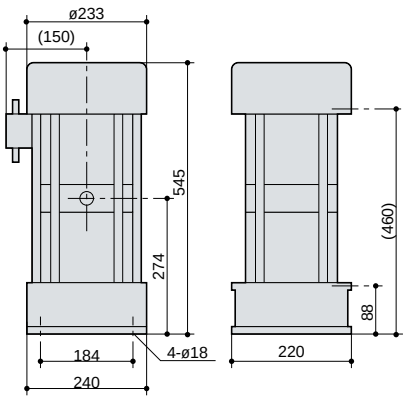

PDA-W

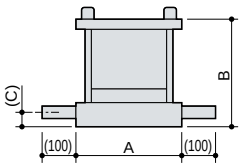

PDA-H
PD-H

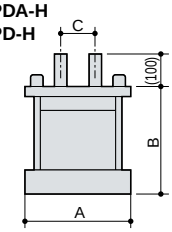

Model	A	B	C
PD-15H	110	110	19.5
PD-30H	116	124	22.5
PD-60H	142	186	25.5
PDA-20W	148	215	33
PDA-40W	188	255	36
PDA-80W	208	323	38
PD-20W	144	133	50
PD-40W	160	205	60
PD-80W	204	273	80

Chemical fluid dispensing system
CFD/APD

CFD-8T-B

APD-3-B

The Iwaki chemical fluid dispensing system, made up of a pump (CFD) and a controller (APD), is capable of metering and supplying, in addition to hydrochloric acid solutions and hydrofluoric acid solutions, ammonia water which has a high vapor pressure, and a hydrogen peroxide solution which tends to produce bubbles, with high precision.

Two types are available; the pneumatic valve type CFD-8T/APD-3 and the ball valve type CFD-8T-B/APD-3B.
Note: The pneumatic valve is excluded from the specifications.

One APD controller can drive three CFD pumps. The amount of liquid to be supplied by each pump can be set as desired (The number of shots can be set between 0 to 99.)

Specifications for pump

Model		CFD-8T/8T-B
Max. discharge capacity	L/min	8
Liquid temperature range	˚C	20 to 60
Max. discharge pressure	MPa	0.05
Max. stroke rate	spm	30
Supplied air pressure	MPa	0.15 to 0.3
Pump connection port diameter		PFA1/4 tube
Wet-end part material		PTFE/PFA

Note 1: Max. discharge capacity shows when pumping clear water at 20˚C.
Note 2: The leak sensor, which is an optional item, can be attached.

Specifications for controller

Model	APD-3	APD-3-B
Power supply voltage	DC24V 10%	
Power consumption	20VA or less	
Starting input	Potential free or transistor open collector	
Ready output / Time-up alarm	Photocoupler open collector	NPN transistor open collector
Setting of shot number	by means of ten key	by means of digital switch
Dimensions in mm	W230 x D180 x H90	

Note: Power consumption does not include the load on the alarm connection side.